REV	DATE	NOTES
A	10/12/11	Initial Release

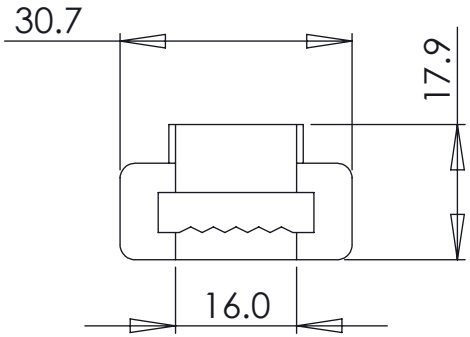

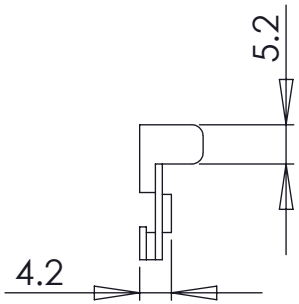

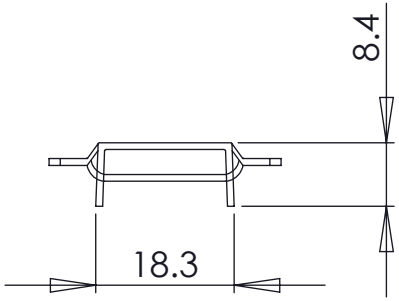

PROPRIETARY AND CONFIDENTIAL
THE INFORMATION CONTAINED IN THIS DRAWING IS THE SOLE PROPERTY OF **CAMBRIDGE RESOURCES**. ANY REPRODUCTION IN PART OR AS A WHOLE WITHOUT THE WRITTEN PERMISSION OF **CAMBRIDGE RESOURCES** IS PROHIBITED.

Notes:
1. All components to be compliant with RoHS, California Proposition 65, EU REACH SVHC, and US Consumer Product Safety Commision directives for hazardous substances
2. Parts to be free of burrs and sharp edges

DRAWN	CHECKED	DATE
RH	RH	10/11/11

UNLESS OTHERWISE SPECIFIED:
DIMENSIONS ARE IN MILLIMETERS
[ ] DENOTES INCHES
TOLERANCES x ± 1 [0.04]
x.x ± 0.5 [0.02]

MATERIAL
SS316

FINISH
SEE NOTES

DO NOT SCALE DRAWING

CAMBRIDGE
960 Alabama Ave, Brooklyn, NY 11207 P:718-649-1666 F:718-485-4403

TITLE:
Cambridge Marine Grade Buckle Seal
5/8" Stainless Steel Strapping

SIZE	DWG. NO.	REV
A	B58-MG	A

SCALE: 1:1 | SHEET 1 OF 1